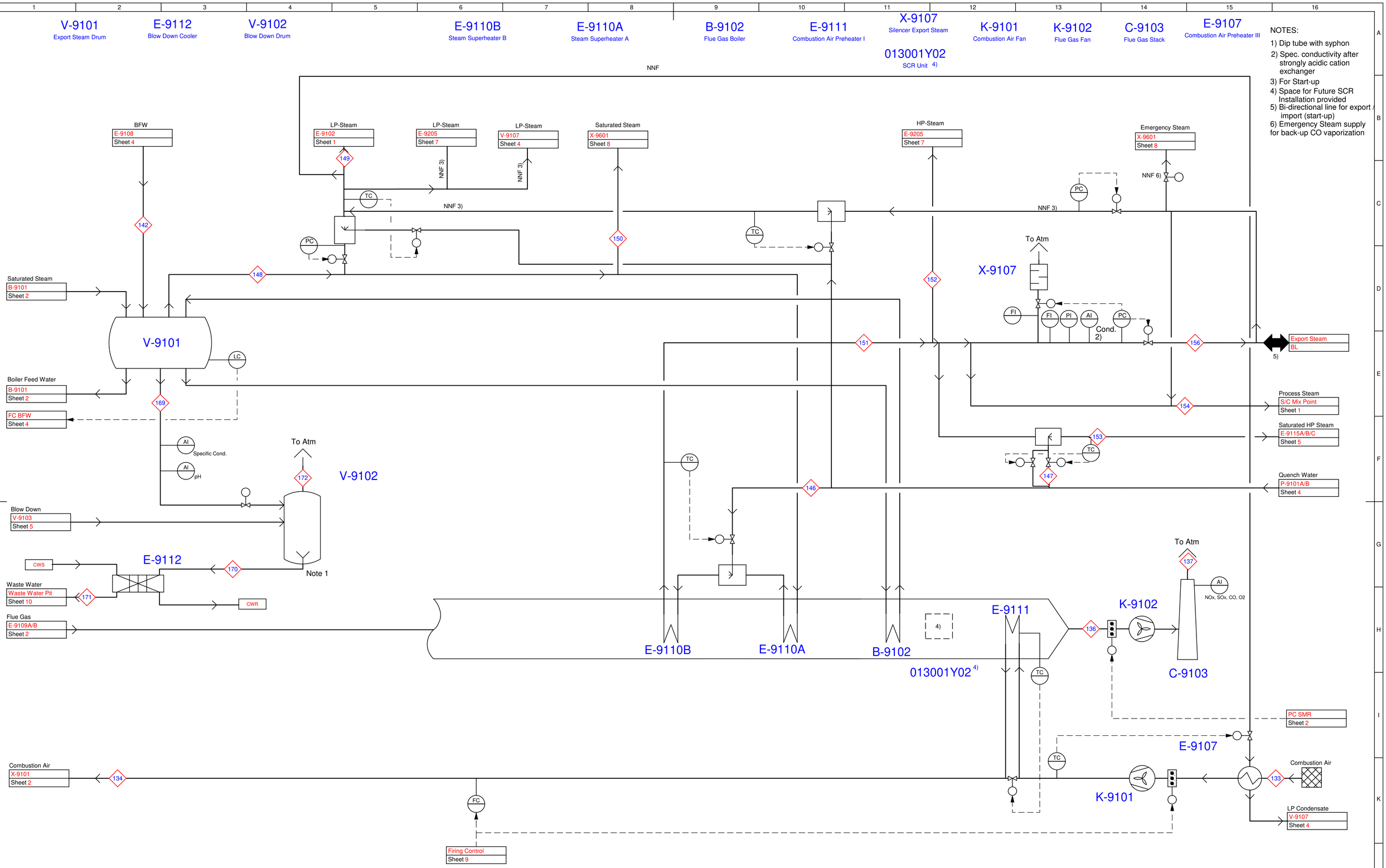

NOTES:

1) Dip tube with syphon
2) Spec. conductivity after strongly acidic cation exchanger
3) For Start-up
4) Space for Future SCR Installation provided
5) Bi-directional line for export / import (start-up)
6) Emergency Steam supply for back-up CO vaporization

Rev.	Name (Prepared/Changed)	Name (Checked)	Name (Approved)	Date	Status	Kind of Revision
?	?	?	?	?	?	?
?	?	?	?	?	?	?
?	?	?	?	?	?	?
?	?	?	?	?	?	?
?	?	?	?	?	?	?
?	?	?	?	?	?	?
2	Michal Ziemianski	Stephan Burgstaler	Marcin Lesny	19.02.2021	AFD	Approved for Design
1	Michal Ziemianski	Stephan Burgstaler	Marcin Lesny	03.02.2021	RFR	Ready for Review
0	Michal Jurasz	Stephan Burgstaler	Marcin Lesny	21.10.2020	RFR	Ready for Review

Air Liquide Confidential Information
This print is the property of L'Air Liquide S.A. or its (direct or indirect) affiliates or subsidiaries and contains valuable confidential information. Copyright and all other rights in this print are expressly reserved. No part of this print may be disclosed by the intended recipient to a third party, reproduced, copied, lent, or disposed of, directly or indirectly, nor used for any purpose other than that for which it is expressly furnished. This print is lent subject to return on demand.

Original Size: A1

Case: Design

Identification: UNIT ? ?

Job name: BorsodChem HyCO

•• CONFIDENTIAL - RESTRICTED

Air Liquide ENGINEERING & CONSTRUCTION

BorsodChem HyCO
Flue Gas Duct and Steam System

Process Flow Diagram — SHEET 3

Client-Document-No.: ?

Job No.	Document No.	Rev.
10112	10112-01-01-PR-302003KH	2

Printed By: ? Date: ? Time: ?