P-9102A/B
Process Condensate Pump

E-9114
Process Condensate Interchanger

V-9103
Process Condensate Separator

E-9115A/B/C
Process Condensate Vaporizer

X-9108
Silencer Process Steam

NOTES:
1) Final number of Heat Exchangers to be defined

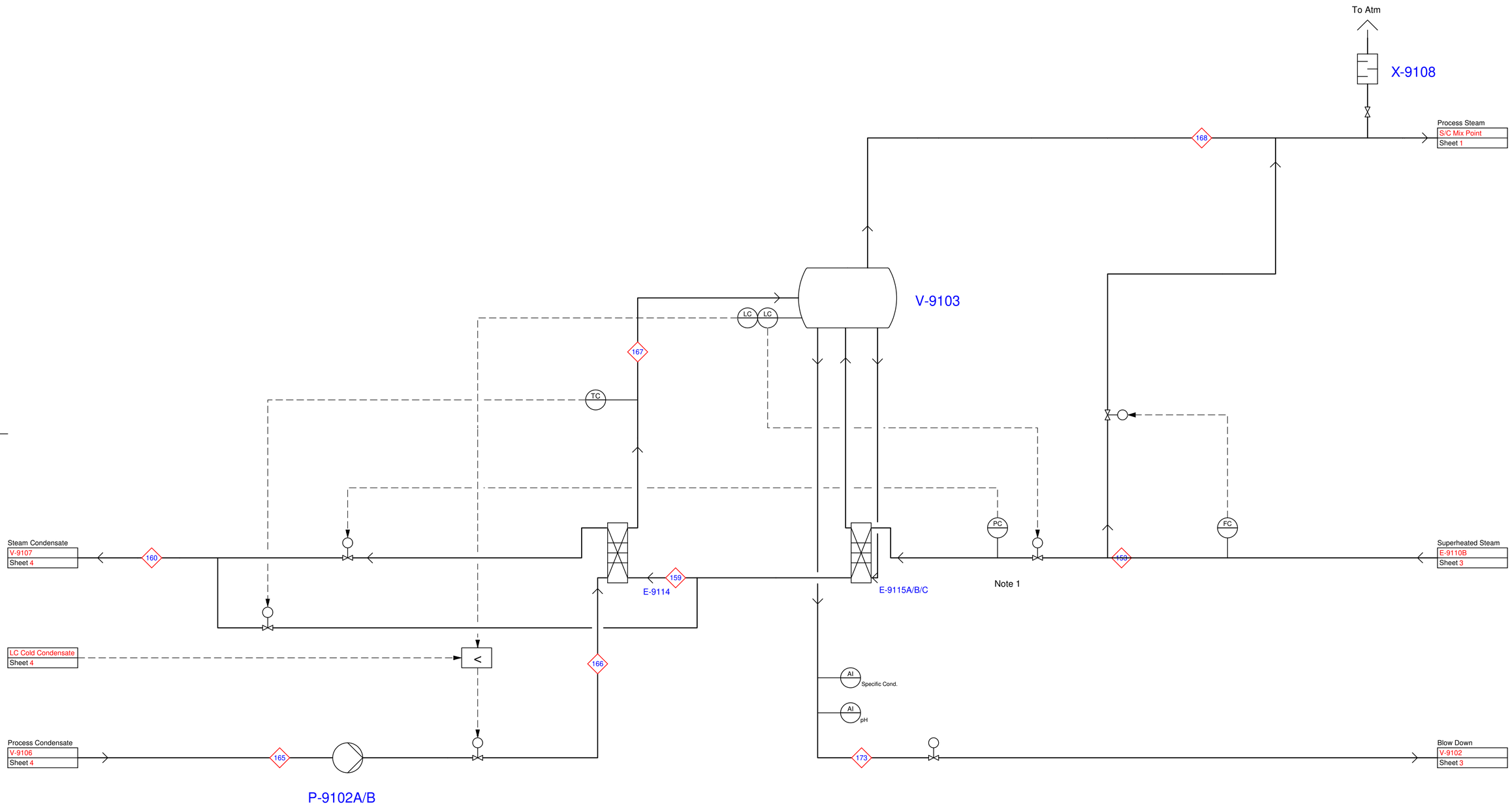

Rev.	Name (Prepared/Changed)	Name (Checked)	Name (Approved)	Date	Status	Kind of Revision
?	?	?	?	?	?	?
?	?	?	?	?	?	?
?	?	?	?	?	?	?
?	?	?	?	?	?	?
?	?	?	?	?	?	?
?	?	?	?	?	?	?
?	?	?	?	?	?	?
1	Michal Ziemianski	Stephan Burgstaler	Marcin Lesny	19.02.2021	AFD	Approved for Design
0	Michal Jurasz	Stephan Burgstaler	Marcin Lesny	21.10.2020	RFR	Ready For Review

Air Liquide Confidential Information
This print is the property of L'Air Liquide S.A. or its (direct or indirect) affiliates or subsidiaries and contains valuable confidential information. Copyright and all other rights in this print are expressly reserved. No part of this print may be disclosed by the intended recipient to a third party, reproduced, copied, lent, or disposed of, directly or indirectly, nor used for any purpose other than that for which it is expressly furnished. This print is lent subject to return on demand.

Original Size: A1

Case: Design

Identification: UNIT ? ?

Job name: BorsodChem HyCO

•• CONFIDENTIAL - RESTRICTED

Air Liquide ENGINEERING & CONSTRUCTION

BorsodChem HyCO
Process Condensate Vaporizer
Process Flow Diagram
SHEET 5

Client-Document-No.: ?

Job No.	Document No.	Rev.
10112	10112-01-01-PR-302005KH	1

Printed By: ? Date: ? Time: ?